ISSN (Print) : 0974-6846
Indian Journal of Science and Technology, *Vol 9(24), DOI: 10.17485/ijst/2016/v9i24/96054, June 2016* ISSN (Online) : 0974-5645

A Study on the Safe and Efficient Method of Transmitting Data in ZigBee Network

Jae-Young Lee*

Department of Liberal Education, Semyung University, Korea;
klitie@semyung.ac.kr

Abstract

Background/Objectives: The main purpose of this study is to find a way to improve the sliding window method which is used in ZigBee network data transmission. We focus on a process that gives a solution for solving a problem when there is a loss of data in the first stage and reduces unnecessary message which occurs because of power saving feature of ZED in non-beacon mode. This allows a safe and efficient data transfer in ZigBee network. **Methods/Statistical Analysis:** Among the data transmitted in sliding window method, only the first data includes the window size. As a result, when there is a loss in the first data, the receiving node cannot send out ACK message since it can't figure out the window size. Accordingly, the sending node cannot send out the following data. Therefore, we propose a method for including window size information in all of the data transferred. **Findings:** As the window size is included in every data, the receiving node has no problem in sending out ACK message even though the first data is lost. Also, the window size information can act as a Sequence Number for the received data, which makes it easier to identify the data which is lost in the transmission process. Data Request message refers to a message that informs other devices that ZED which has a Power Saving feature in the non-beacon mode is Power on. Data Request message is sent out whether it includes data for ZED or not. Devices that received Data Request message transfer ACK message to ZED. The core point dealt with in this paper shows that it is possible to reduce unnecessary message transmission by including Power On time information in the last ACK message of ZED. **Improvements/Applications:** This paper suggests a problem solving method for reducing unnecessary message transmission and data loss in the ZigBee network to enable safer and efficient data transmission.

Keywords: Internet of Things, Window Size: Data Transmission, Wireless Sensor Network, ZigBee Network

1. Introduction

ZigBee network is the method for the local area which has the feature of data communication in low-speed, low power consumption and low construction cost, and it is used in the wireless sensor network[1]. The safe transmission of data is guaranteed by the receiving node, transmitting the acknowledgment message of reception to transmitting node when transmitting node sends data to the receiving node in ZigBee network.

The number of data that the transmitting node can transmit at a time in a row without getting the acknowledgment message of reception from the receiving node is called window size. But when the window size information is included only in the first data and first data is lost during transmitting data, the problem can occur because the receiving node can't figure out the window size. For this, this thesis suggests a method which problems of transmitting data can't occur although specific data is lost during the transmission of data. In addition, I would like to propose a method of reducing unnecessary massages directly for transmitting data in data transmission with other devices due to the function of power saving of ZED, in transmitting data in non-beacon mode between Zed on the ZigBee network and other devices. The suggested method can reduce the traffic of the network by reducing the number of transmitted massage and the power consumption of ZED can be lowered if ZED reduces the number of transmitting messages.

For the composition of the thesis, ZigBee network and window size are explained in chapter 2, and the method of transmitting the data safely and effectively in

* *Author for correspondence*

ZigBee network is suggested in chapter 3. In chapter 4, the effectiveness of suggesting method is analyzed and the conclusion and future work are suggested in chapter 5 lastly.

2. Background and Related Work

2.1 ZigBee network

ZigBee network is the short-range wireless communication which additionally defined APS layer, ZOD, ZDP, AF, NWK and ZigBee security layer, based on PHY layer of IEEE 802.15.4 standard and MAC sub layer. ZigBee network doesn't have high functionality, and it provides sufficient functions for transmitting message by connecting with sensor, and has an advantage that can be connected to many devices using less power[2,3].

ZigBee networks are divided into FFD, Full Function Device and RFD, Reduced Function Device), depending on the performance. FFD may be used as any devices of ZigBee network, and can be consist of all topology. RFD is unable to serve as Coordinator or Router, and it is implemented only in a very simple function, so it is only used as ZED and suggested by only Star topology[4].

ZigBee networks are also divided into three types, ZC (ZigBee Coordinator), ZR (ZigBee Router) and ZED (ZigBee End Device), depending on the role of network. ZC exists only within the network and it manages the information for all devices in the network, and it is responsible for communication with other ZigBee network (Figure 1).

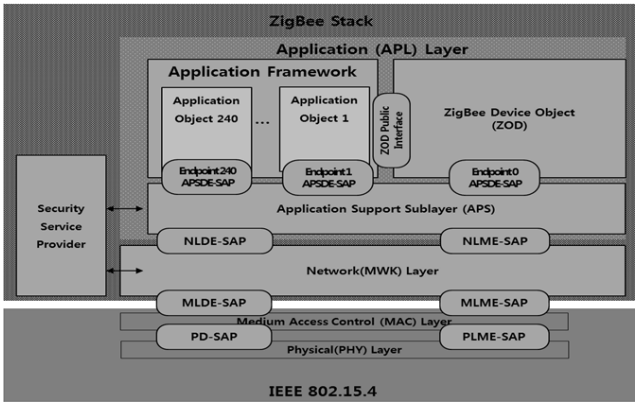

Figure 1. ZigBee stack architecture.

ZR serves as collecting and delivering data of ZED which has a relatively small transmission rage within ZigBee network, and it has relatively low cost for the device since it uses less memory due to having less necessary functions than ZC. ZED serves as transferring by measuring data with device existing in the lower of the ZigBee network. ZED can communicate with ZR and the cost of the device is inexpensive since it doesn't need a great function. So it has the advantage which is good for composing network[5,6].

In ZigBee networks, three types of devices form topologies such as Star, Tree, Mesh, etc as shown Figure 2.

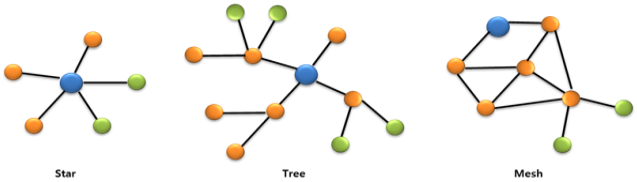

Figure 2. ZigBee network topology.

In star topology, the communication is made by the method of passing all of the data to ZC, and it simple but has a disadvantage that there is one path between every node. In Tree topology, all devices are composed with concepts of parents node and children node. To pass the data to other node by children node, it should pass the data to parents node and parents node should search for children node table, and if there is matching node, it forwards. And if not, it passes to ZC according to Tree path. In mesh topology, there are multiple paths between nodes and if one path fails, it can pass data to another path, but it is complex to implement[7].

Data transmitting models for ZigBee network are divided into three types. They are transmitting from coordinator to ZED, transmitting from ZED to Coordinator, and transmitting between coordinators. Each transmitting types are divided into beacon mode and non-beacon mode, depending on whether or not they used beacon. Beacon serves as activating the device through the special message that is allowed by the particular ZigBee network topology[8].

When Coordinator in a non-beacon mode transmits data to ZED, Coordinator has to wait until the power of ZED is on due to the function of power saving of ZED. When the power ZED is on, ZED sends Data Request message to ensure whether there is data to be sent to itself from Coordinator. Data Request message is a message stating that power of ZED is on. If there is no data to

transmit as a response to the Data Request message for Coordinator, it sends the acknowledgment message (FP = 0) to ZED and ZED which received the message turns the power off. If Coordinator has data to send, it transfers an acknowledgment message (FP = 1), and transmits a data message. ZED which received the data sends a reception acknowledgment message to Coordinator and turns the power off. Problem of this method is that despite the lack of data of Coordinator to be transmitted to ZED, it receives the data request message when the power of ZED is on, and it should exchange unnecessary messages confirming that there is no data to transmit. It allows the unnecessary traffic on ZigBee network to increase, and it also has the disadvantage of consuming power of ZED[8].

2.2 Window Size

In order to transmit data over the network, it should establish a session. In order to establish session, it should synchronize Sequence Number between the sender and receiver, and it uses three way handshaking algorithm as shown in Figure 3 to synchronize the sequence number.

After the session is established, it uses a technique called Sliding Window for efficient data transmission. There exists window size in Sliding Window, and window size means the number of data that sender can transmit at a time without having to wait for a reception acknowledgment message from the receiver. If the window size is 1, the sender may send the data 1 and must receive the reception acknowledgment message 2 from the receiver, so that it can send the following data 2. if the reception acknowledgment message 2 is not sent from the receiver after certain time after the sender sends the data 1, it is considered that the data 1 is lost, and retransmits the data 1 again.

If the window size is 10, the sender can send ten data at once without getting receiving the reception acknowledgment message from the receiver. Also, if the reception acknowledgment message 11 is not sent from the receiver after a certain time, all the data sent from transmitter are deemed lost, and it retransmits ten data again.

If the window size is small, the reliability of transmitting data increases, but the waiting time for the acknowledgment message gets so long, and transmission efficiency decreases. If the physical reliability of network is high, the size of the network window can be enlarged and its transmission efficiency can be increased[9].

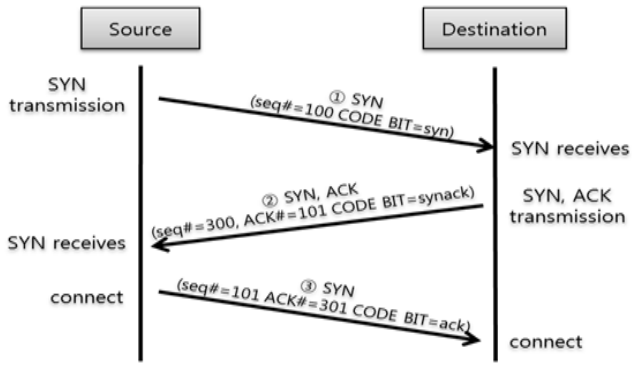

Figure 3. Three way handshaking.

3. The Proposed Method

In Section 3, I would like to propose a secure and efficient method of transmitting data in Zigbee network. The receiving node transmits data reliably by receiving data as much as the window size at a time, checking the received data and responding to the transmitting node with that result. However, the window size information is contained only in the first data, so if the first data is lost during transmitting data, the receiving node can't figure out the window size. And if the window size is unknown, problem of not knowing when to send the reception acknowledgment message to the transmitting node as for the received data occurs. For this, the proposed method in this thesis is to include all the data to be transmitted in the window size.

If the window size is five, the window size information which should be included in the first data among five data to be transmitted at a time becomes 5, and the window size information which should be included in the second data becomes 4. The receiving node can figure out how many data are going to be received at a time by reading the window size information from the firstly transmitted data, and waits until receiving the data which the information of the window size is indicated as 1. If the data is not received for a fixed time, the receiving node sends a message that data loss has taken place to the transmitting node. When the data which window size information is indicated as 1 is received, the receiving node transmits an acknowledgment message to the transmitting node that ensures all data are received well if there isn't any lost data after checking for lost data. If the data which has the specific window size information is lost, the receiving node transmits information of the lost

data to the transmitting node, and receives only lost data again.

Problems of data transmitting of ZigBee network due to Power Saving function of ZED in non-beacon mode is that it should receive the Data Request message indicating that the power of the ZED is on, regardless of whether there is data to send ZED for other devices, and it should send the reception acknowledgment message for that. For this, the proposed method in this thesis is allowing to include the following power-on time information of ZED in the reception acknowledgment message when ZED which received data from other devices transmits the last acknowledgment message of reception.

If other devices can figure out the power on time of ZED in advance, the device which is about to send the data to ZED can transmit data to ZED without Data Request message of ZED, and ZED doesn't need to send messages that are not directly related to transmitting data also (Figure 4).

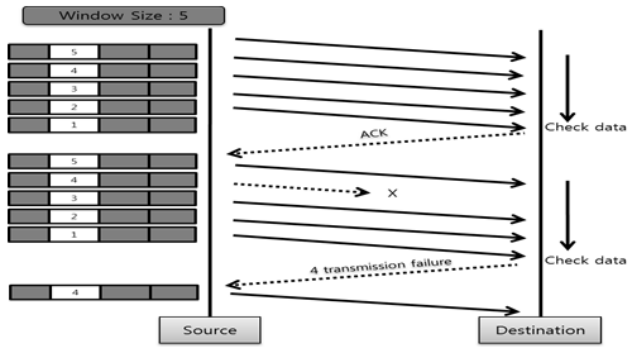

Figure 4. Proposed method.

4. Efficency Analysis

If the receiving node transmits the data as much as the window size at a time using the Sliding Window, and receives an reception acknowledgment message for transmitted data once, the receiving node can reduce time waiting for the acknowledgment message, and the receiving node can transmit more data during the same time by transmitting a reception acknowledgment message only once for a number of received data.

If the receiving node allows including the window size information in all transmitting data at a time like the proposed method, first, the window size information is included in other data even though the firstly received data is lost during transmission, so the receiving node can figure out the window size. Second, since the window size included in each of the data can be used as the sequence number of received data, it can check the lost data quickly and send the message for retransmission for that, to the transmitting node after checking the window size.

The solution that we suggested for preventing meaningless message transmission between non-beacon mod ZED and other devices in ZigBee network is that the Power on Time information of ZED should be included in the last reception acknowledgment message from ZED.

If the device you want to transfer the data to the ZED can figure out the time when power of ZED is on in advance, there is no need for Data Request message and the acknowledgment message for that. It results in reducing the transmission of unnecessary messages directly needed for the transmission of messages between ZED and other devices. And if unnecessary messages are reduced, it results in reducing traffic over the ZigBee network. In addition, if messages that ZED sends are reduced, consuming the power of ZED can be reduced.

5. Conclusions and Future Challenges

In this paper, I proposed the method to safely and efficiently transmit data in a ZigBee network.

Transmitting the data in ZigBee network, the data is transmitted using Sliding Window method which has the window size. In Sliding Window, it transmits the window size information including it only the first data. The proposed method in this thesis is including window size information in all data to be sent at a time. If the window size information is included in the transmitting data, first, window size can be figured out even though the first data is lost during the transmission, second, the window size information serves as the sequence number of data and lost data during receiving can be found immediately, so retransmit message can be transmitted immediately to the transmitting node.

Data Request message of ZED in ZigBee network includes the function of informing power of zed when it is on, and it is transmitted to other devices regardless of having the data to send ZED. If there is device which doesn't have data to send, it should receive the meaningless data request massage, and send a reception acknowledgment message for that.

The method to reduce the unnecessary messages between ZED and transmitting device and reduce the power consumption of ZED is to include the time information on when the power ZED is on, in the reception acknowledgment message that ZED sends.

This results in reducing the unnecessary messages needed for transmitting data directly between ZED and devices for transmitting data. And it results in reducing the traffic on the network if unnecessary messages are reduce. Also, ZED doesn't need to transmit Data Request message to confirm the presence of transmission data to be transmitted to another device, so it may lower the power consumption of ZED.

As for the future work, the author would attempt to study the improved method for data transmission in a wireless network that can be trusted.

6. References

1. Tavakkolai H, Yadollahi N, Yadollahi M, Hosseinabadi AAR, KardgarM. Sensor selection wireless multimedia sensor network using gravitational search algorithm. Indian Journal of Science and Technology. 2015; 8(14):1–6. DOI: 10.17485/ijst/2015/v8i14/68808.
2. Kim D-S. Key distribution protocol for improved security in wireless sensor network. Graduate School Dankook University; 2014
3. Kim B-H, Lim J-M, Park C-S. Analysis of ZigBee security mechanism. Journal of Security Engineering. 2012; 9(5):417–28
4. Available from: http://blog.naver.com/shj1126zzang/90192987820.
5. Jung B-I, Kim C-S. A study on the security technology for the internet of things. Jonrnal of Security Engineering. 2014; 11(5):429–28
6. Suk J. A study on the location tracking system by using ZigBee in wireless sensor network. The Graduate School Wonkwang University; 2011.
7. Available from: http://blog.naver.com/shj1126zzang/90193000227.
8. Yun D-S. Efficient and reliable data transmission algorisms in ZigBee networks. Graduate School Hanyang University; 2009.
9. Jeon C-W. Improving a internal network performance by controlling window size. Department of computer Science Graduate School Dankook University; 2003.